Amiga

CD32_R4

Rev.1.43 (27.09.2015)

Revision History

REV	DESCRIPTION	DATE	APRVL	MANAGER
A	Production Release	08/12/93		
B	Revised per ECO 930277	09/14/93		
C	Revised per ECO 930305	10/18/93		

Jumpers and Stuff

REF	TYPE	DESCRIPTION	PAGE
R203	SMT	PAL/NTSC COMPOSITE	4
R205	SMT	M/N-PAL COMPOSITE	4
R245	SMT	PAL SUBCARRIER	4
R246	SMT	NTSC SUBCARRIER	4
R596-9	SMT	ROM SIZE/WIDTH	3
R765	SMT	CD POWER BYPASS	6
XJ1	SMT	32 BIT ROM OPTION	3
SW1	PTH	POWER SWITCH	9

Connectors

REF	TYPE	DESCRIPTION	PAGE
CN1	DB9P	Game Controller #1	5
CN2	DB9P	Mouse Controller #2	5
CN3	RCA-J	Right Audio Output	7
CN4	RCA-J	Left Audio Output	7
CN8	DIN-4	Power Connector	9
CN9	M.DIN-4	S-Video	4
CN10	RCA-J	Composite Video	4
CN13	M.DIN-6	Keyboard	5
CN14	2mm10x1	LED/Headphone PCB	6
CN17	Flex-23	CD Drive	6
P1	Edge182	Expansion Connector	8
X2	RCA	Modulator/RF	4

Signal Glossary

SIGNAL	DESCRIPTION (AREA)	PAGES
28MHZ	28.63636 MHz Master Clock	
7MHZ	7.15909 MHz Processor Clock	
A[23:1]	Processor Address Bus (68000)	
ACK	Data Acknowledge (Parallel Port)	
AS	Address Strobe (68000)	
AUDIN	Audio Input (RS232 Port)	
AUDOUT	Audio Output (RS232 Jack)	
BEER	Bus Error (68000)	
BG	Bus Grant (68000)	
BGACK	Bus Grant Acknowledge (68000)	
BLISS	Blitter Slowdown (Chips)	
BLIT	Chip Memory Access (Chips)	
BR	Bus Request (68000)	
BUSY	Device Busy (Parallel Port)	
CASL/U	Column Address Strobe (DRAM)	
CCK/CCKQ	Color Clock / Quadrature (Chips)	
CDAC	7.15909 MHz Quadrature Clock (Chips)	
CHNG	Media Change (Floppy)	
CLKRD/WR	Read-Time Clock Read / Write (RTC)	
COMP	Monochrome Composite Video (Video)	
CSYNC	Composite Sync (Video)	
CTS	Clear to Send (RS232 Port)	
D[15:0]	Processor Data Bus (68000)	
DIR	Step Direction (Floppy)	
DKRD	Disk Read Data (Floppy)	
DKWD	Disk Write Data (Floppy)	
DKWE	Disk Write Enable (Floppy)	
DMAL	Chip DMA Request Line (Chips)	
DRA[8:0]	DRAM Address Bus (DRAM)	
DRD[15:0]	DRAM Data Bus (DRAM)	
DSR	Data Set Ready (RS232 Port)	
DTACK	Data Transfer Acknowledge (68000)	
DTR	Data Terminal Ready (RS232 Port)	
E	Peripheral Enable Clock (68000)	
EXTICK	Expansion Present / RTC Tick	
FC[2:0]	Function Code (68000)	
FIRE0/1	Fire Button 0/1 (Joysticks)	
HLT	Processor Halt (68000)	
HSYNC	Horizontal Sync (Video)	
INDEX	Index Pulse (Floppy)	
INT[2,3,6]	Interrupt Request (Chips)	
IORESET	I/O Reset	
IPL[2:0]	Interrupt Priority Level (68000)	
KBCLOCK	Keyboard Clock (Keyboard)	
KBDATA	Keyboard Data (Keyboard)	
KBRESET	Keyboard Reset (Keyboard)	
LDS/UDS	Upper / Lower Data Strobes (68000)	
LED	Power On LED / Audio Filter Disable	
LEFT/RIGHT	Left Right Audio (Audio)	

SIGNAL	DESCRIPTION (AREA)	PAGES
LPEN	Light Pen Trigger (Joysticks)	
MTR	Motor On (Floppy)	
MTR0	Motor On - Drive 0 (Floppy)	
M0V/M0H	Mouse 0 Quadrature V/H (Joysticks)	
M1V/M1H	Mouse 1 Quadrature V/H (Joysticks)	
OVL	Overlay ROM over RAM	
OVR	Override System Decoding	
PIXELSW	Genlock Pixel Switch (Video)	
POT0X/0Y	Pot Lines 0 X/Y (Joysticks)	
POT1X/1Y	Pot Lines 1 X/Y (Joysticks)	
POUT	Paper Out (Parallel Port)	
PPD[7:0]	Parallel Port Data (Parallel Port)	
RAMEN	RAM Enable (Chips)	
REGEN	Chip Register Enable (Chips)	
RAS0/1	Row Address Strobe (DRAM)	
RDY	Drive Ready (Floppy)	
RESET	General Reset	
RGA[8:1]	Register Address Bus (Chips)	
R/G/B	Red / Green / Blue (Video)	
RI	Ring Indicate (RS232 Port)	
ROMEN	ROM Enable (ROM)	
RTS	Request to Send (RS232 Port)	
RST	Processor Reset (68000)	
RXD	Receive Data (RS232 Port)	
RW	**Processor Read/Write (68000)**	
SEL	Select (Parallel Port)	
SEL[3:0]	Drive Select (Floppy)	
SIDE	Side Select (Floppy)	
STEP	Step In/Out Command (Floppy)	
TRK0	Track Zero Sense (Floppy)	
TXD	Transmit Data (RS232 Port)	
VMA	Valid Memory Address (68000)	
VPA	Valid Peripheral Address (68000)	
VSYNC	Vertical Sync (Video)	
WE	Write Enable (DRAM)	
WPROT	Write Protect Sense (Floppy)	
XCLK	External Genlock Clock (Video)	
XCLKEN	External Clock Enable (Video)	
XRDY	External Data Ready	
	** Credit Card and IDE Stuff? **	

Key Components

REF	CHIP	DESCRIPTION	PAGE
U1	68EC020	68EC020 Proc. 16MHz	2
U2	8374	Alice	2
U3	8364	Paula	5
U4	4203	Lisa	4
U5	391563	AKIKO	2,3,6
U6	27C8000	CD32 ROM 256Kx16,120nS	3
U9	24C08	Serial NVRAM	6
U12	CXA1145	Composite Encoder	4
U14,49	RH5VA43	Voltage Sense IC	5,7
U16-19	514800	DRAM 512Kx8, 80nS	3
U30	BT101	Triple 8-bit Video DAC	4
U31	LC78835	16-bit Audio DAC	7
U39	CXA1553	Headphone Amplifier	7
D215	LM385	DAC Reference Diode	4
X1	TTL-OSC	28.63636 MHz (NTSC)	4
	TTL-OSC	28.37516 MHz (PAL)	4
X2	VA3424	RF Modulator (NTSC)	4
	UD3626	RF Modulator (PAL)	4
X3	TTL-OSC	16.9344 MHz	6
Y451	XTAL	4.433619 MHz (PAL)	4
Y452	XTAL	M/N-PAL	4
Z221	BPF	Chroma Bandpass Filter	4
Z222	Delay	Luma Delay Line	4

CD/GS REV4 PCB

C.A.D. Generated
No manual changes may be made to this document

DIRECTORIES AND REVISION HISTORY

		DATE
DESIGN BY:	G. Robbins	08/06/92
DRAW:	GRB	07/16/93
LAST:	BAF	10/18/93
CHKD:		
APPR:		

USED ON: C/A100 | NEXT ASSY: 365436

Commodore
Schematic CD/GS Rev 4
CD/Game System Player Unit -"Spellbound"

SIZE C | 365437 | REV C
SCALE | SHEET 1 OF 10

PATH: /project/a300/spellbound.rev4 sheet1

Rev:1.43 (27-09-2015)

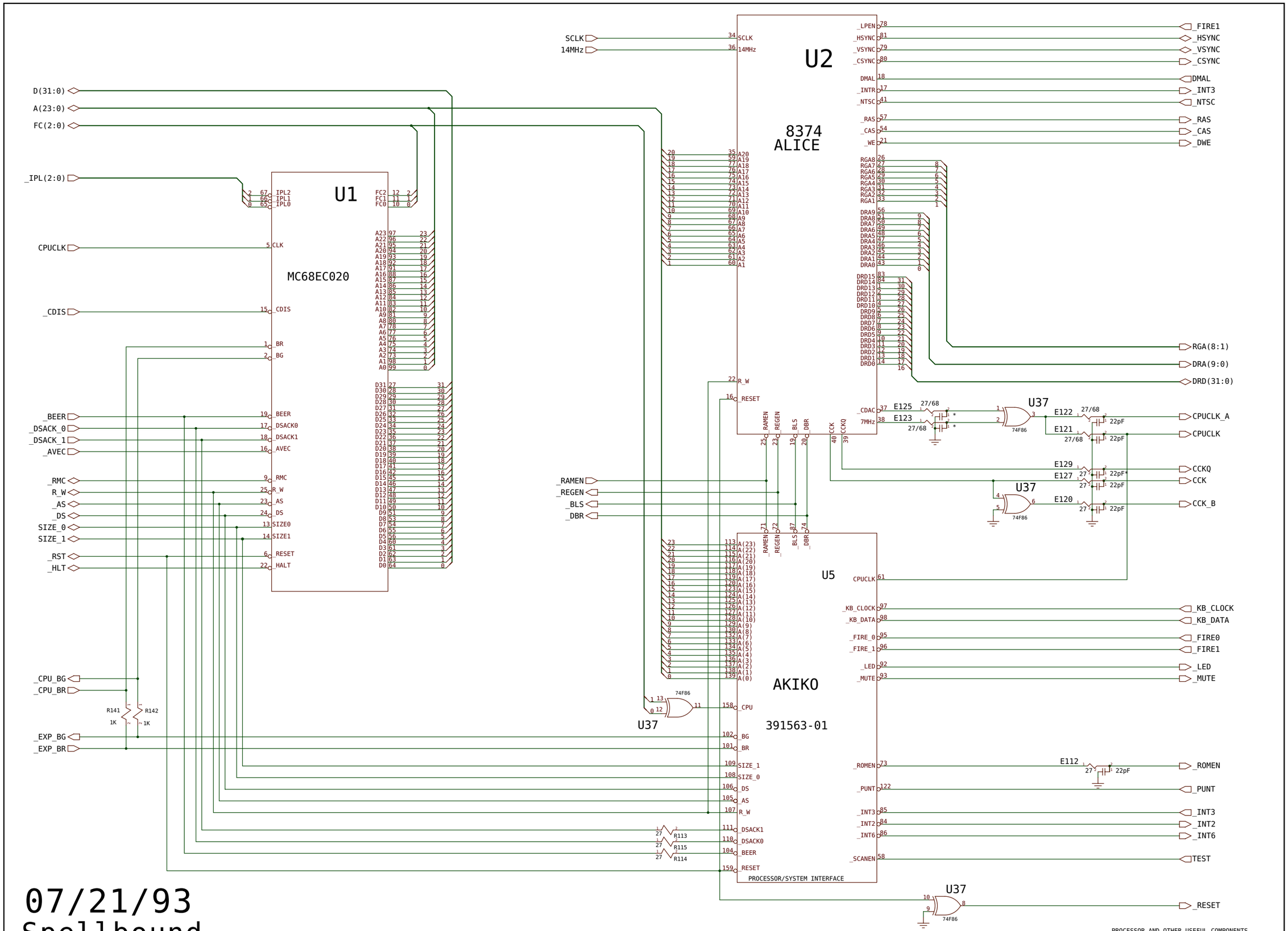

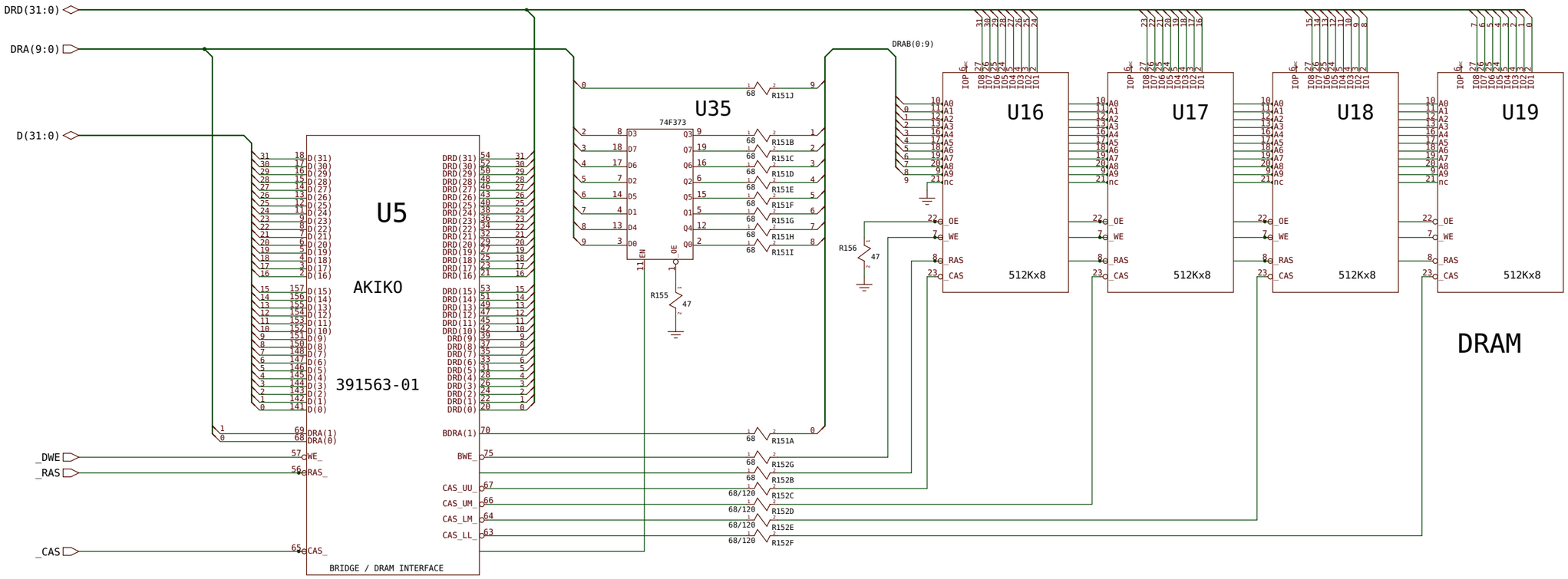

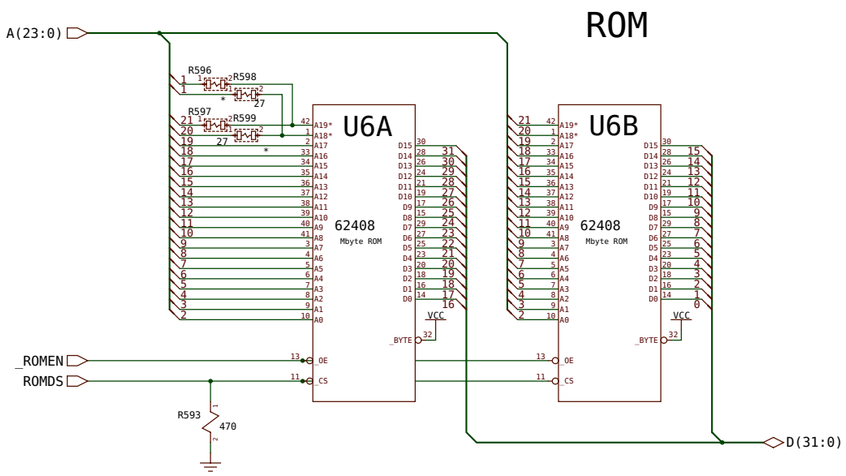

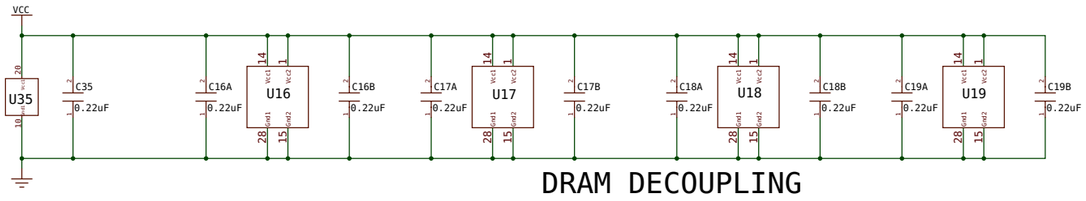

DRAM DECOUPLING

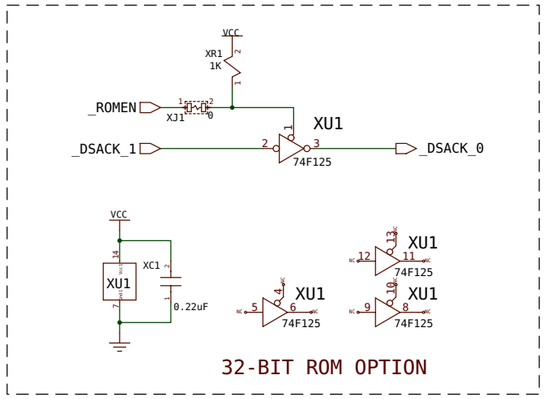

32-BIT ROM OPTION

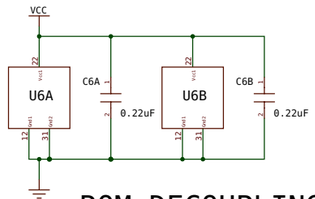

ROM DECOUPLING

CD/GS PLAYER PCB

MEMORY AND...WELL, I USED TO REMEMBER

DESIGN BY: G. Robbins	DATE 08/06/92	Commodore
DRAW: GRR	07/14/92	Schematic CD/GS Rev4 CD/Game System Player Unit -"Spellbound"
LAST: BAF	09/14/93	
CHKD:		
APPR:		
USED ON C/A100	NEXT ASSY 365436	SIZE C 365437 REV B
		SCALE SHEET 3 OF 10

PATH: /project/a300/spellbound.rev4 sheet3

Rev.1.43 (27-09-2015)

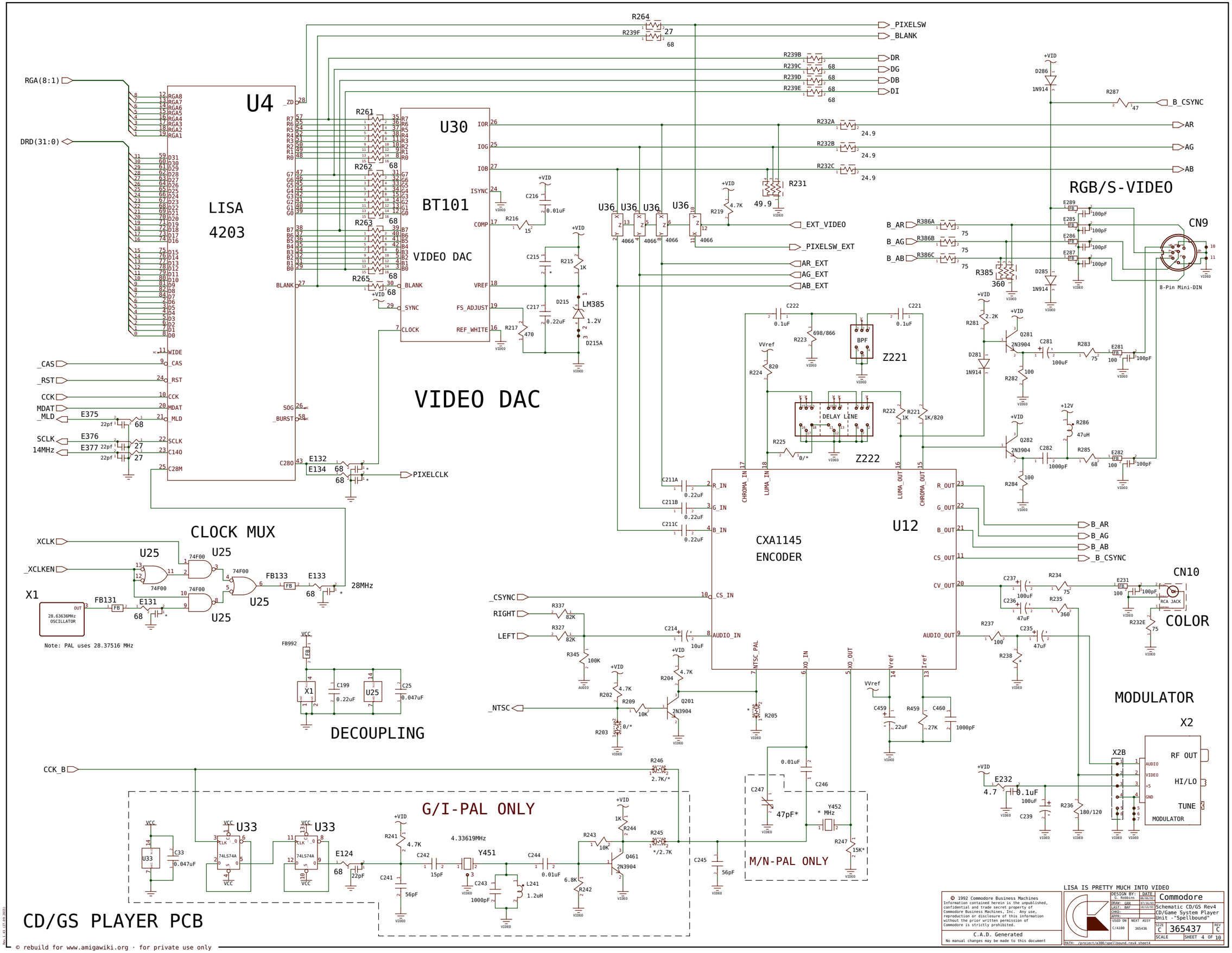

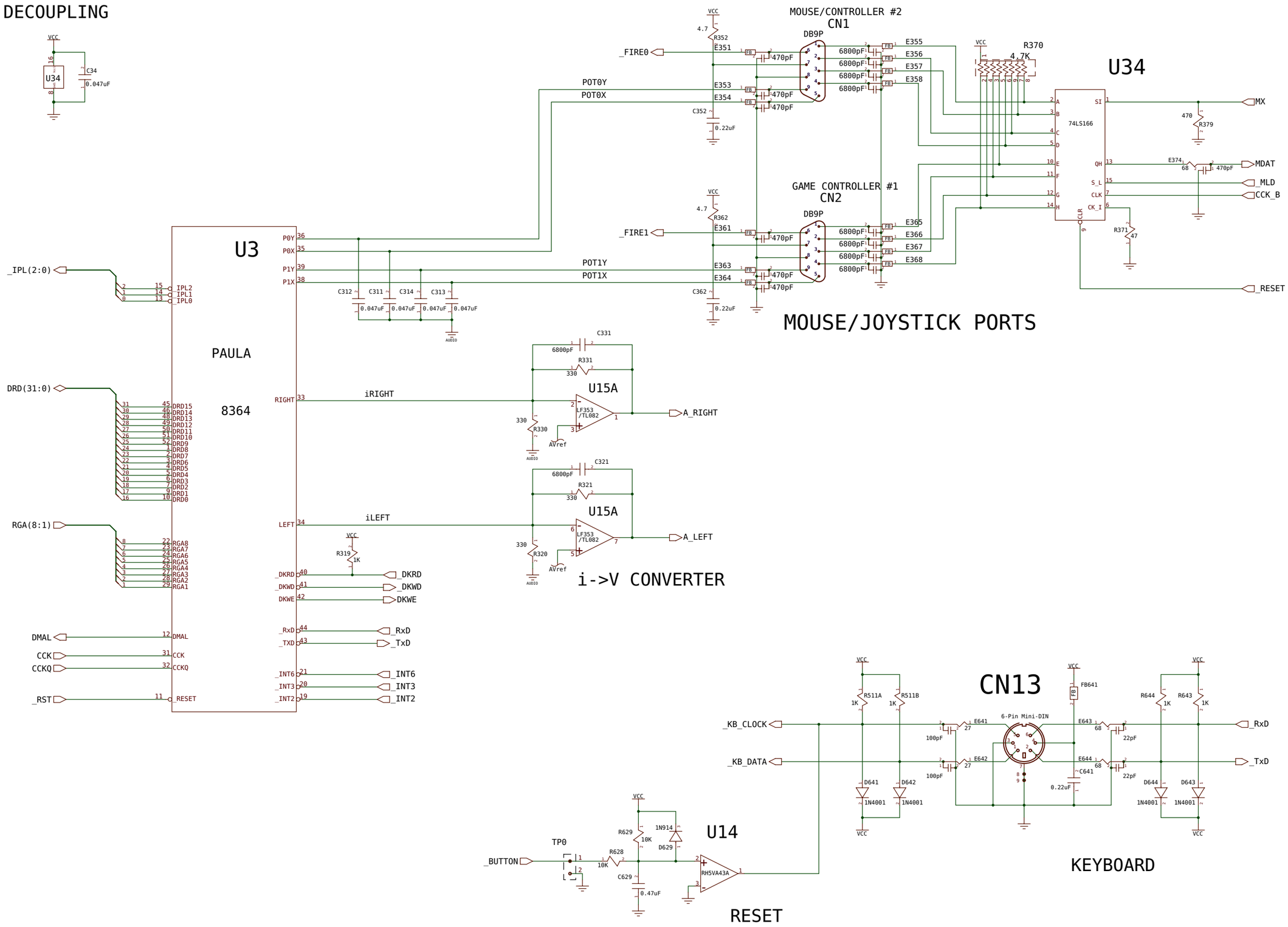

CD/GS PLAYER PCB

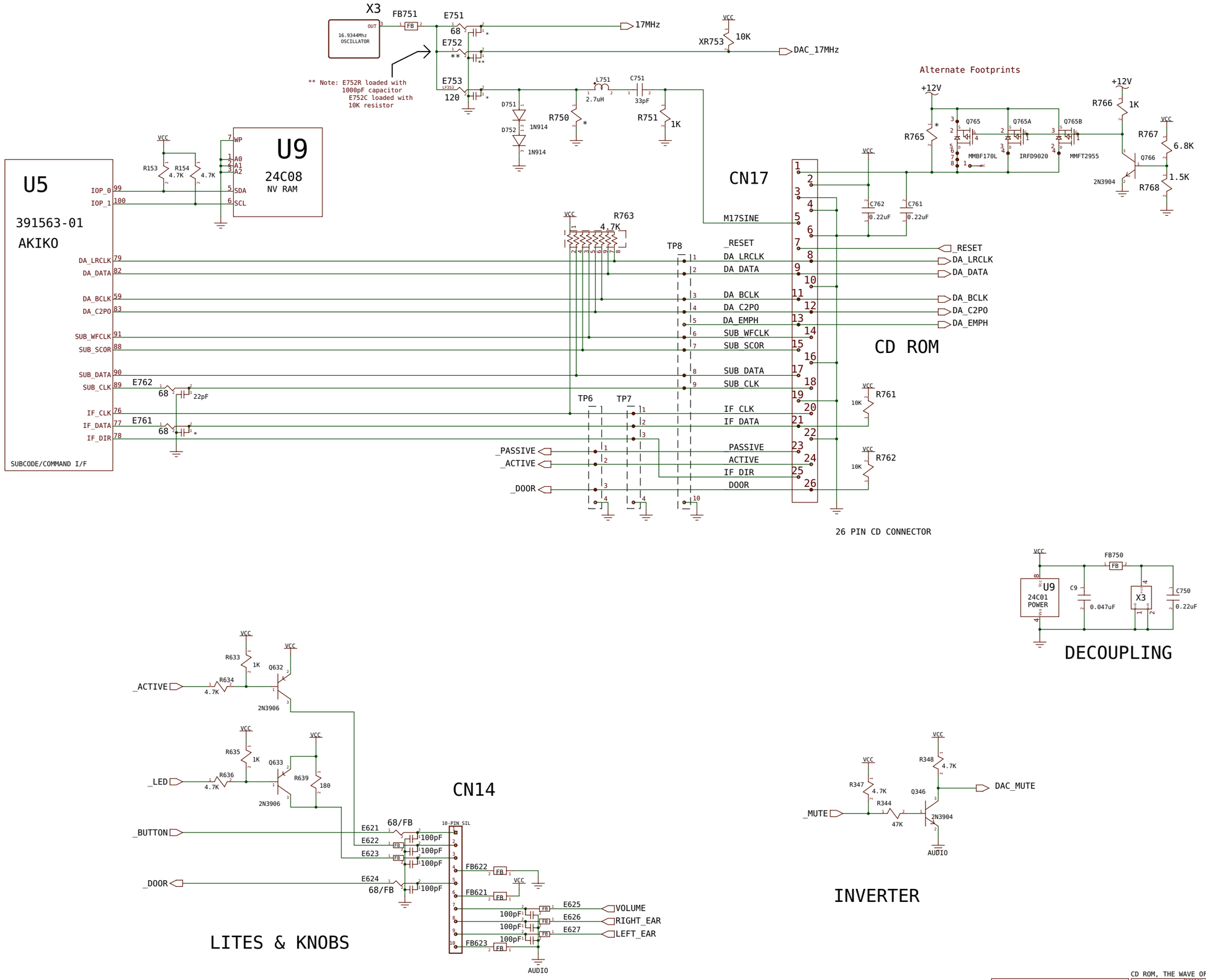

CD/GS PLAYER PCB

CD ROM, THE WAVE OF THE FUTURE - NOT!

C.A.D. Generated
No manual changes may be made to this document

DESIGN BY: G. Robbins	DATE 08/06/92	Commodore
DRAW: GRB	07/16/93	Schematic CD/GS Rev4 CD/Game System Player Unit -"Spellbound"
LAST: BAF	10/18/93	
CHKD:		
APPR:		
USED ON c/A100	NEXT ASSY 365436	SIZE C 365437 REV C
		SCALE SHEET 6 OF 10

PATH: /project/a300/spellbound.rev4 sheet6

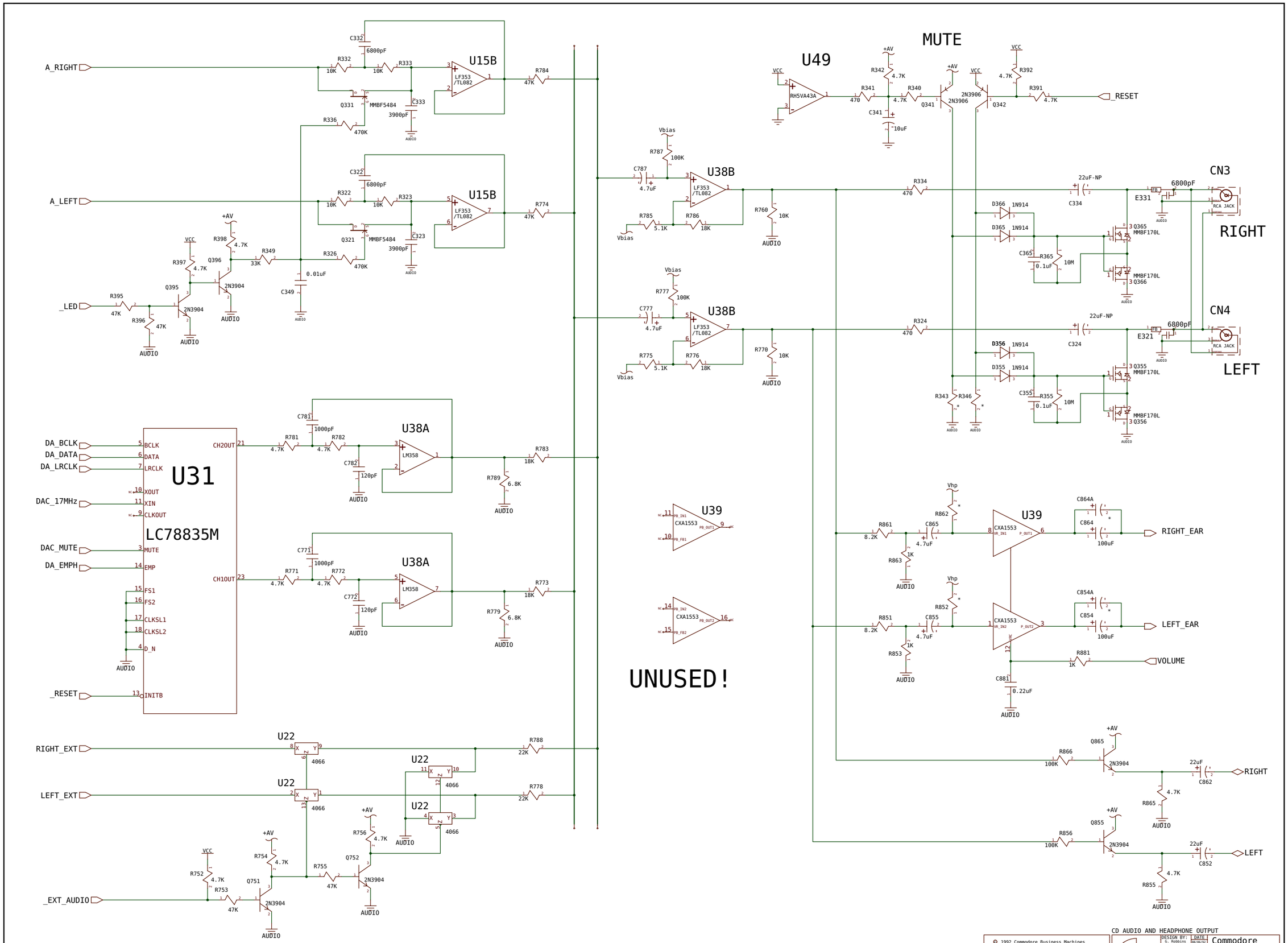

CD/GS PLAYER PCB

CD AUDIO AND HEADPHONE OUTPUT

C.A.D. Generated
No manual changes may be made to this document

DESIGN BY: G. Robbins	DATE 08/06/92	Commodore
DRAW: GRB	07/14/93	Schematic CD/GS Rev4 CD/Game System Player Unit -"Spellbound"
LAST: BAF	10/18/93	
CHKD:		
APPR:		
USED ON C/A100	NEXT ASSY 365436	SIZE C 365437 REV C
		SCALE SHEET 7 OF 10

PATH: /project/a300/spellbound.rev4 sheet7

EXPANSION CONNECTOR

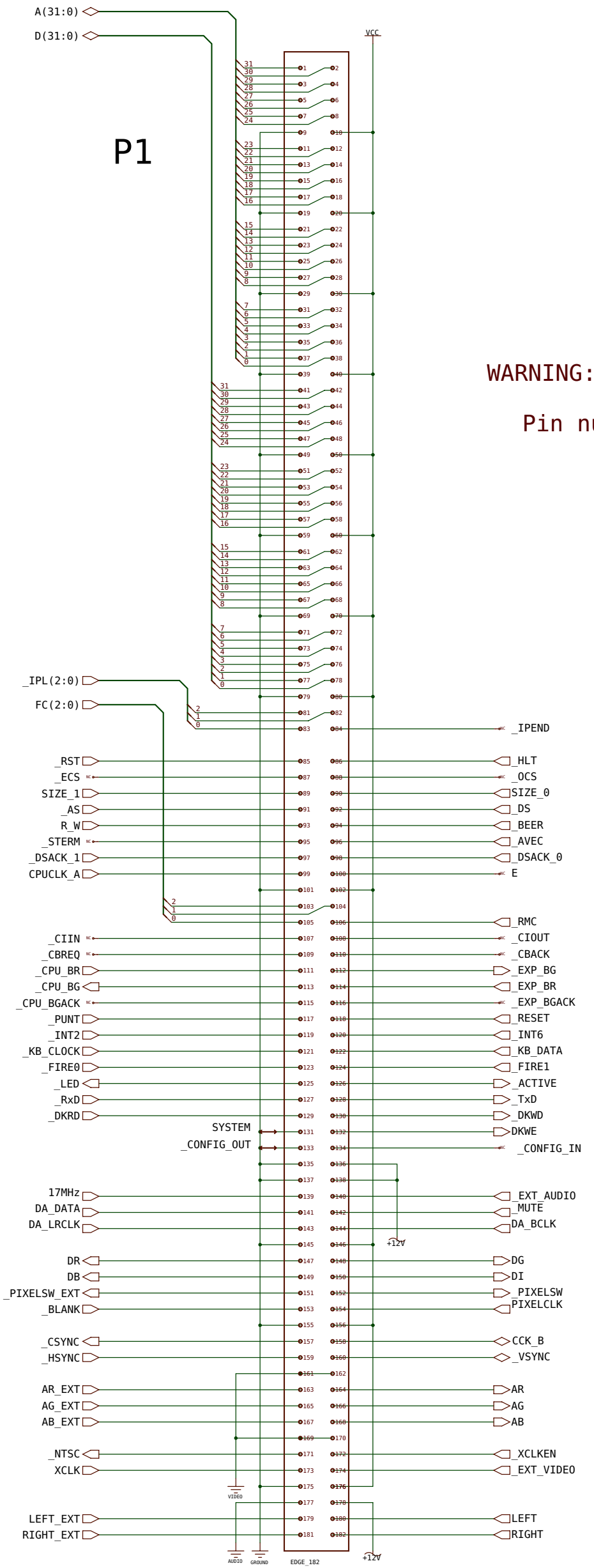

WARNING:

Pin numbers are backwards

EXPANSION OR IS IT MANIFEST DESTINY?

C.A.D. Generated
No manual changes may be made to this document

DESIGN BY: G. Robbins	DATE 08/06/92	Commodore
DRAW: GRR	07/16/93	Schematic CD/GS Rev4 CD/Game System Player Unit -"Spellbound"
LAST: BAF	10/18/93	
CHKD:		
APPR:		
USED ON C/A100	NEXT ASSY 365436	SIZE C 365437 REV C
		SCALE SHEET 8 OF 10

PATH: /project/a300/spellbound.rev4 sheet8

CD/GS PLAYER PCB

Rev 1.43 (27.09.2015)

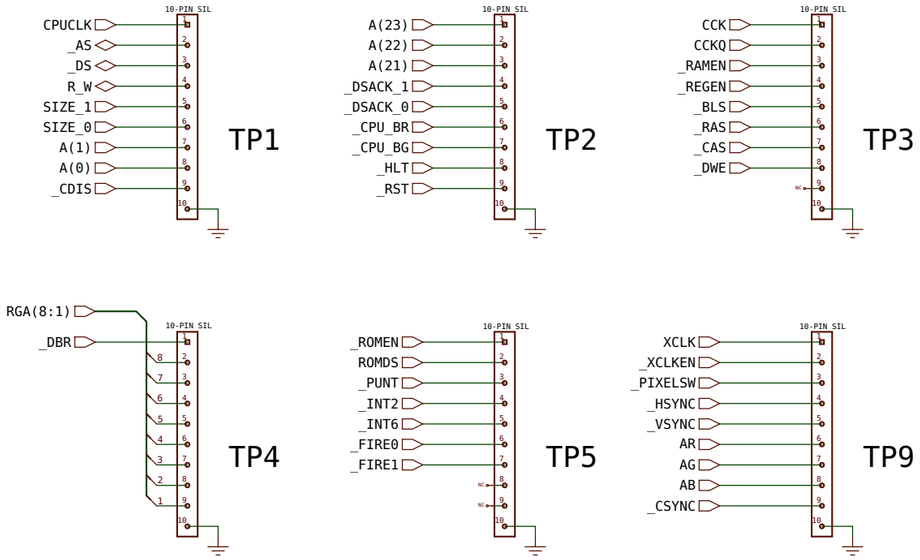

TEST ACCESS

TERMINATION

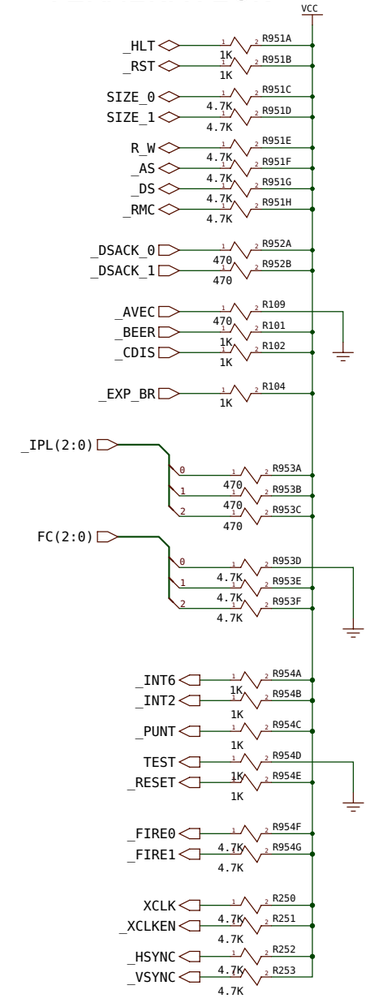

POWER INPUT

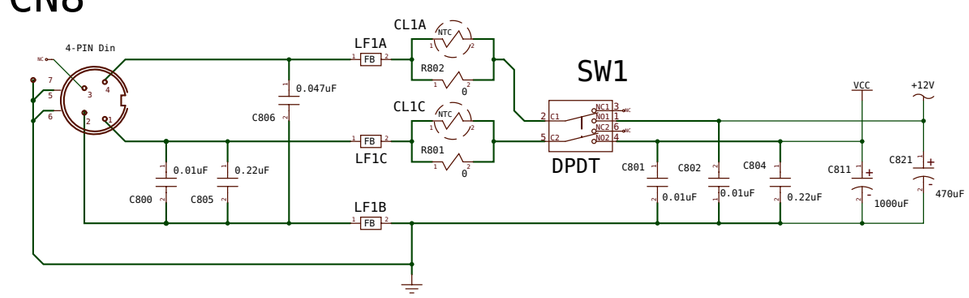

HOLES &c.

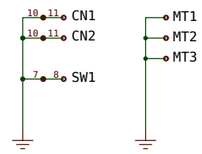

USER INTERFACE AND RELATED DEAD ENDS

C.A.D. Generated
No manual changes may be made to this document

DESIGN BY: G. Robbins	DATE 08/06/92	Commodore
DRAW: GBR	07/16/93	Schematic CD/GS Rev4
LAST: BAF	10/18/93	CD/Game System Player Unit -"Spellbound"
CHKD:		
APPR:		
USED ON C/A100	NEXT ASSY 365436	SIZE C 365437 REV C
		SCALE SHEET 9 OF 10

PATH: /project/a300/spellbound.rev4 sheet9

CD/GS PLAYER PCB

Rev:1.43 (27.09.2015)

PAULA/AUDIO DECOUPLING

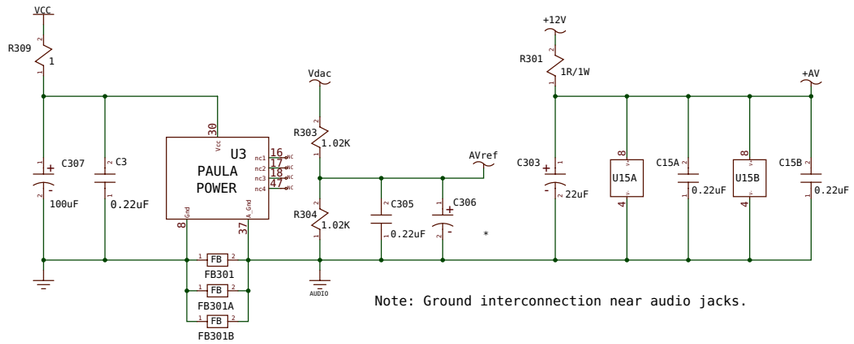

Note: Ground interconnection near audio jacks.

CD/AUDIO DAC DECOUPLING

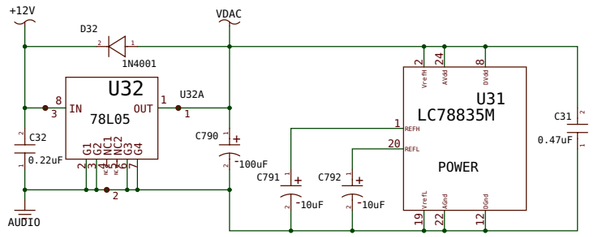

HEADPHONE/AUDIO DECOUPLING

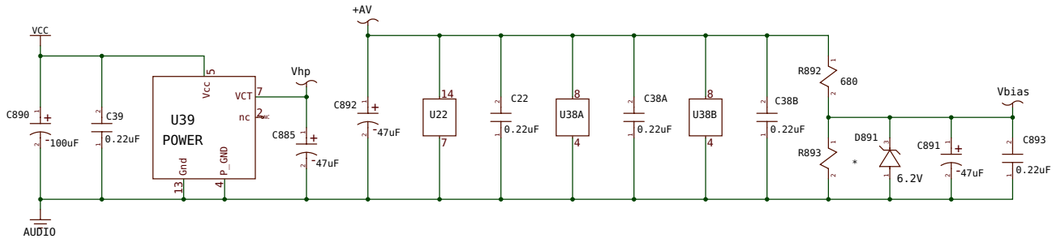

VIDEO DECOUPLING

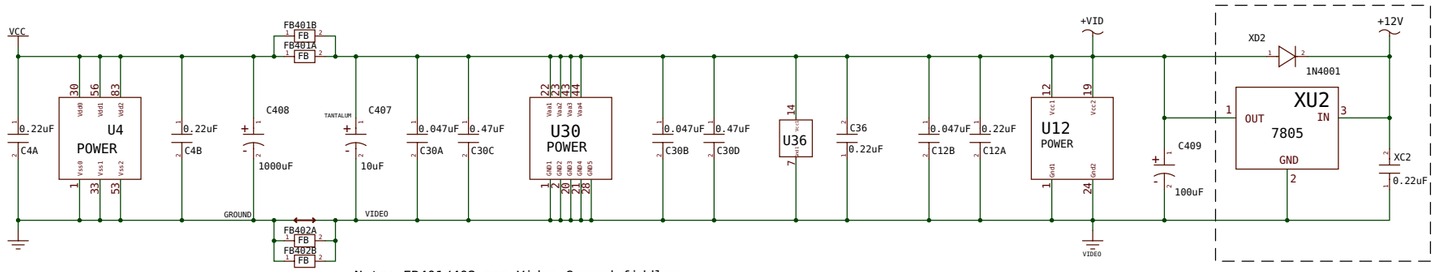

Note: FB401/402 are Video Ground fiddles

PROCESSOR/AKIKO/ALICE DECOUPLING

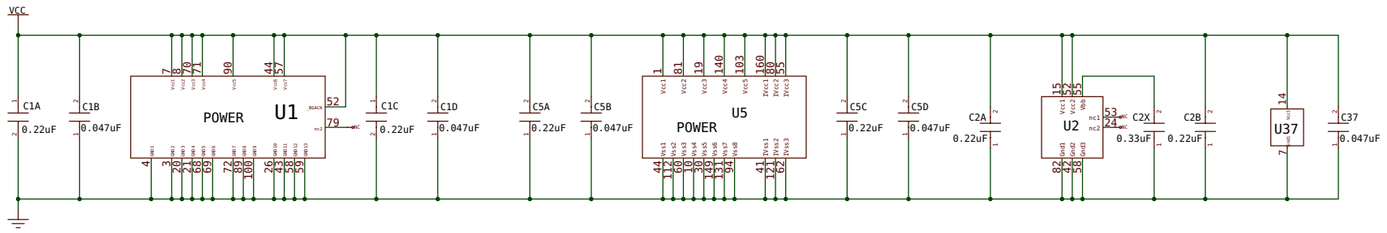

CD/GS PLAYER PCB

POWER MANAGEMENT & DECOPULATION DETAIL

C.A.D. Generated
No manual changes may be made to this document

DESIGN BY: G. Robbins	DATE 08/06/92	Commodore
DRAW: GRR	07/16/93	Schematic CD/GS Rev4
LAST: BAF	10/18/93	CD/Game System Player
CHKD:		Unit -"Spellbound"
APPR:		
USED ON C/A100	NEXT ASSY 365436	SIZE C 365437 REV C
		SCALE SHEET 10 OF 10

PATH: /project/a300/spellbound_rev4 sheet10

REVISIONS				
REV	DESCRIPTION	DATE	APRVL	MANAGER
1	ADVANCE ENGINEERING RELEASE	2/3/93	GRR	
2	REVISED PER ECO 930087	3/10/93	BB	
A	PILOT PRODUCTION RELEASE	4/15/93	GRR	
B	REVISED PER ECO			

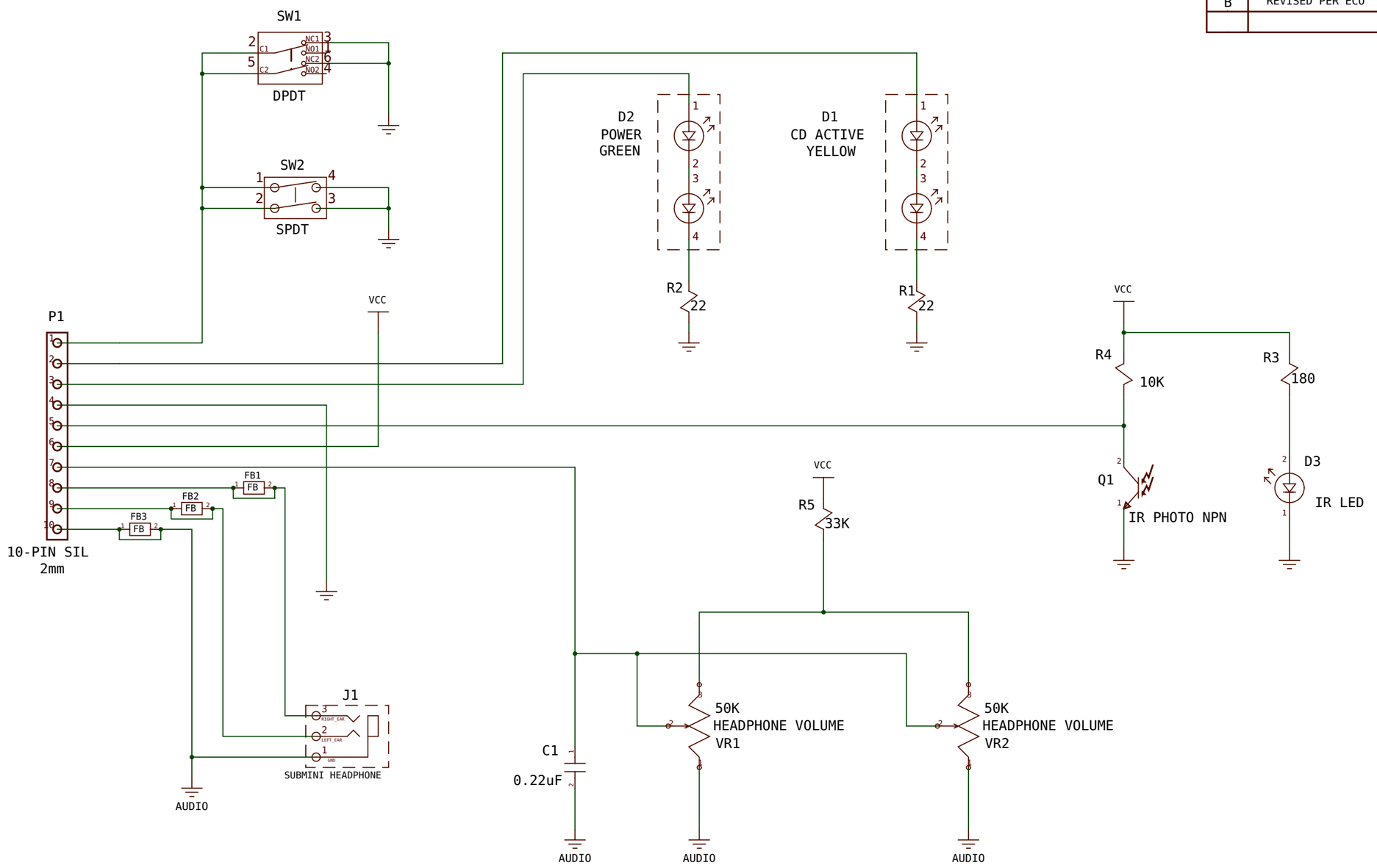

THIS SPACE FOR WHITE-OUT ONLY

C.A.D. Generated
No manual changes may be made to this document

DESIGN BY: B. Fenimore	DATE 5/13/93
DRAW: BAF	5/13/93
LAST: BAF	5/13/93
CHKD:	
APPR:	
USED ON CDGS	NEXT ASSY 356168

Commodore

SCHEMATIC
DISPLAY PCB
CD GAME SYSTEM

SIZE B | 365229 | REV 1

SCALE | SHEET 1 OF 1

PATH: /user/fenimore/CDG/led assy.rev1 sheet1

Rev 1.43 (27.09.2015)

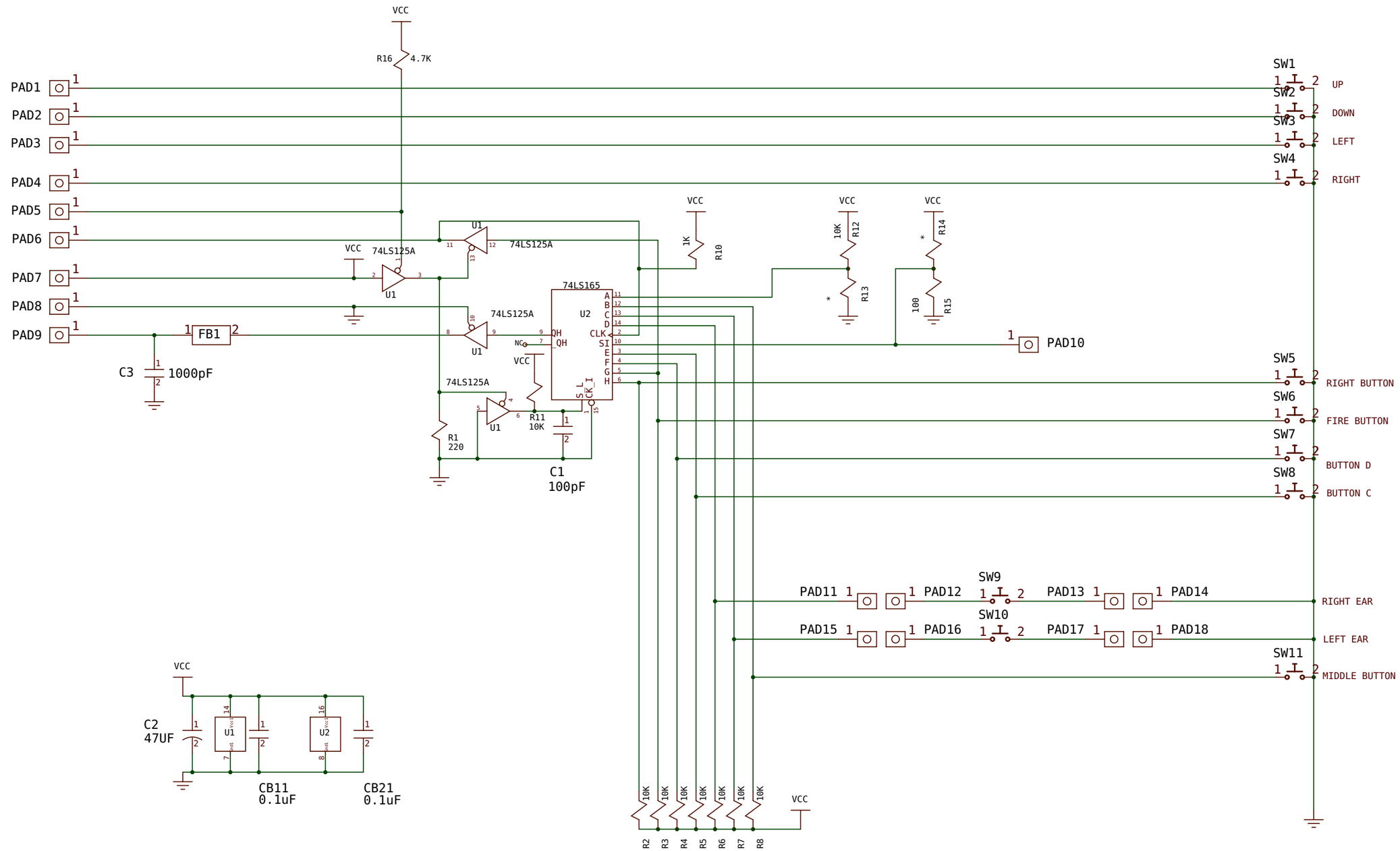

PLUG AND PLAY BABY

C.A.D. Generated
No manual changes may be made to this document

DESIGN BY: D.Fabrizio	DATE 12/16/92	Commodore
DRAW: BAF	09/22/93	Schematic
LAST: BAF	09/22/93	A100 Game Controller Unit -"Spellbound"
CHKD:		
APPR:		
USED ON C/A100	NEXT ASSY	SIZE B / REV 3
		SCALE / SHEET 1 OF 1

PATH: /project/a300/game_cont.rev3 sheet1

Rev.1.43 (27.09.2015)